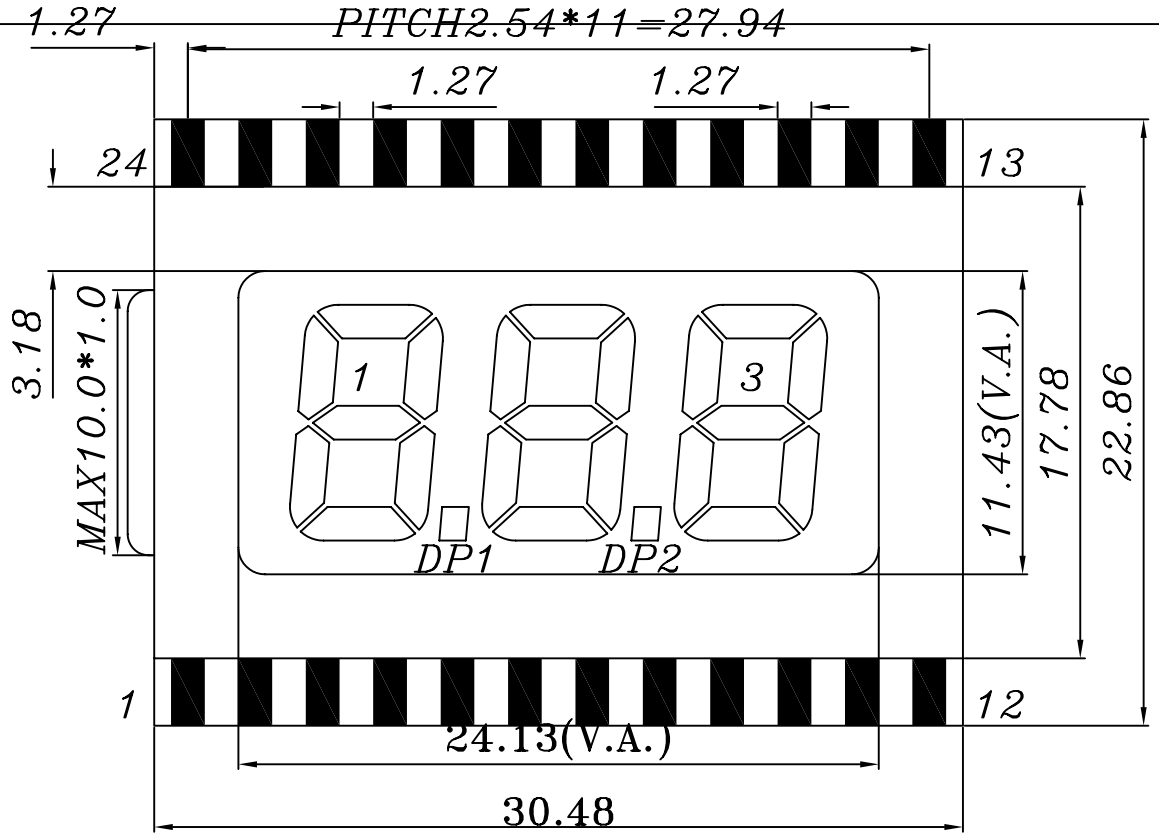

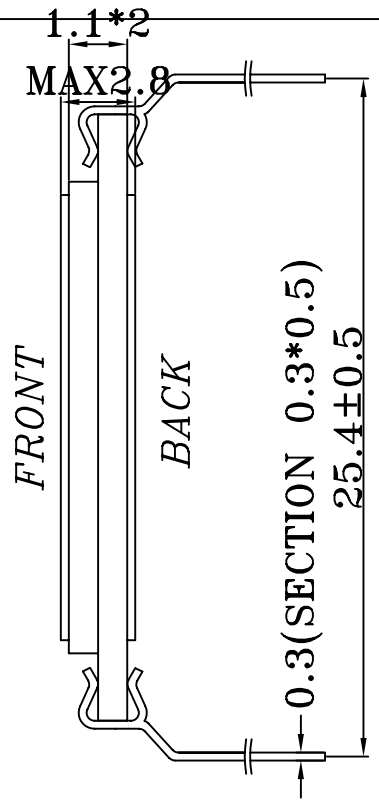

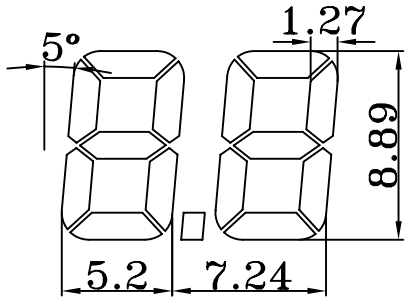

PIN	1	2	3	4	5	6	7	8	9	10	11	12
BP	1E	1D	1C	DP1	2E	2D	2C	DP2	3E	3D	3C	3B
PIN	13	14	15	16	17	18	19	20	21	22	23	24
BP	3A	3F	3G	2B	2A	2F	2G	1B	1A	1F	1G	BP

1.ALL DIMENSIONS ARE IN mm WITH ±0.20
TOLERANCE UNLESS OTHERWISE SPECIFIF
2.VIEWING ANGLE: 6:00 0'CLOCK.
3.VIEWING MODE: POSITIVE,PELECTIVE
4.DISPLAY TYPE : TN
5.CONNECTION: PIN
6.FLUID SPECIFICATION:
DRIVING VOLTAGE: 5.0V
MULTIPLEX LEVEL: STATIC
OPERATING TEMP. : -10°C -- +60°C
STORAGE TEMP. : -20°C -- +70°C

奈格科技有限公司 Nergal Technology Co.,ltd			
客户确认:	绘图: 姚晓虹	纟图编号: NT-574	单位: mm
	审核:	各户编号:	日期: 2004.09
	批准:	图纸版号: 01	页数: 1/1